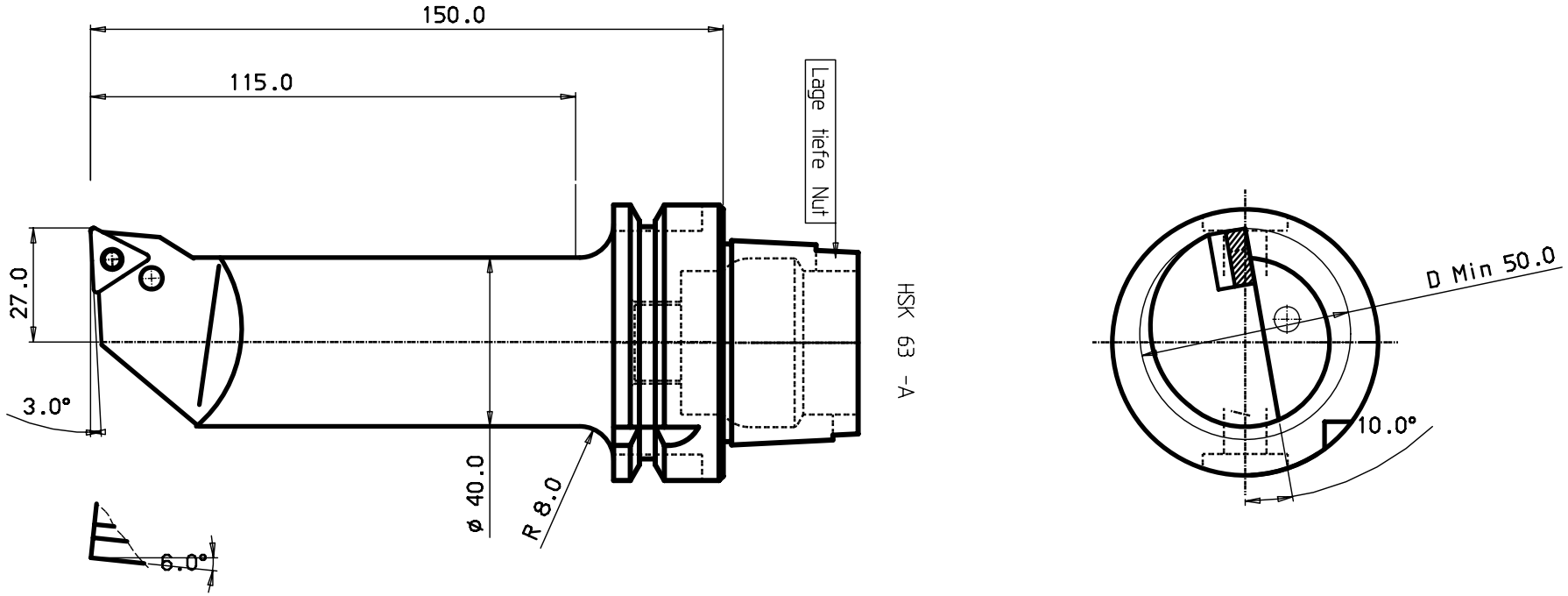

HM-Platte TNMG 160408

5		Schraube	174.3-820M
4		Rohrstift	174.3-858
3		Unterlage	179.3-850M
2		Knihebel	174.3-840M
1		Schaft	

ITEM | Q'NTY | DESCRIPTION | MATERIAL AND REMARKS | RELATED DRAWING | ITEM | SIZE

CATEGORY | DESIGNED | DRAWN | CHECKED | DATE | SCALE | SUPERSEDES

TITLE

Schneidkopf

HAVRANEK

REFERENCE

MODIFICATION | A B C D E F G H J K L M N P R S T U V X Y Z

DESIGN OFFICE | DRAWING NUMBER

HSK63A-PTUNL-27150-16

Tolerance systems acc to ISO

Surface roughness Ra um

Where tolerance not stated:
For threds SS-iso 965/3
For dimensions SS 715 Medium

Dimension	Tol	Angle (Shortest adjacent side in mm)	Tol
-6	±0.10	10	± 1'
(6) - 30	±0.20	(10) - 50	± 30'
(30) - 120	±0.30	(50) -120	± 20'
(120) - 315	±0.50	(120) -	± 10'
(315) - 1000	±0.80		

MOD. | LOCATION | CHANGE REFERENCE | DATE | SIGN

340-CFD100-2

MICROFILMED

Shown or handed over to competitive firms or any third party and is not to be copied without our permission or is to be in the firms drawing remains the property of AB SANDVIK COMPANY