DESIGN OFFICE | DRAWING NUMBER

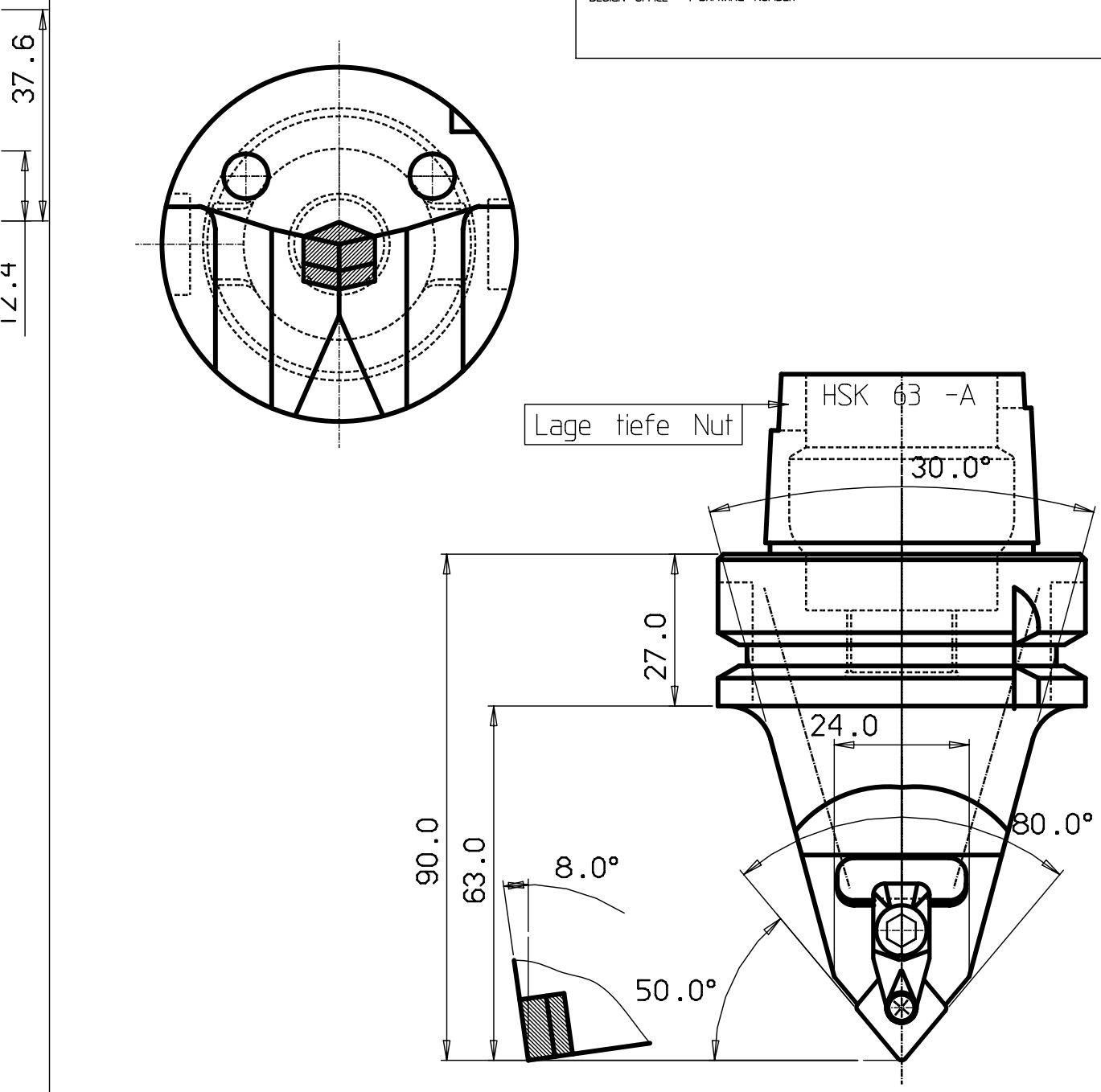

HM-Platte CN::120408

5				
4	1	Schraube f. Unterlage		5513 020-02
3	1	Unterlage		5322 425-01
2	1	Spannsatz		5412 028-021
1		Schaft		

ITEM	Q'NTY	DESCRIPTION	MATERIAL AND REMARKS	RELATED DRAWING	ITEM	SIZE

CATEGORY	DESIGNED	DRAWN	CHECKED	DATE	SCALE	SUPERSEDES

TITLE

Schneidkopf

HAVRANEK
74572 Blaufelden
Tel. 07953/97880
Fax. 07953/978811
Internet www.havranek.de
E-Mail BarbaraHavranek@aol.com

REFERENCE

MODIFICATION | A B C D E F G H J K L M N P R S T U V X Y Z

DESIGN OFFICE | DRAWING NUMBER

HSK63A-DCMNN-00090-12