DESIGN OFFICE | DRAWING NUMBER

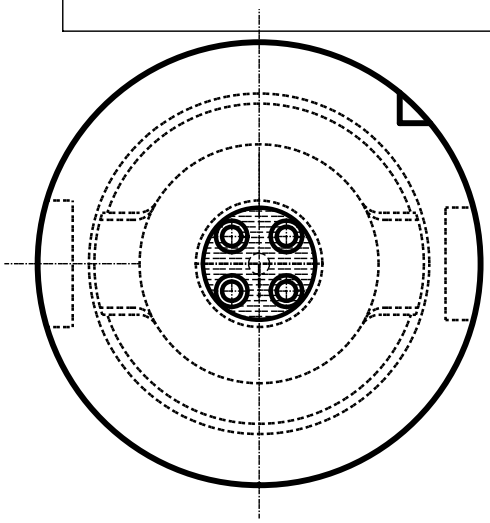

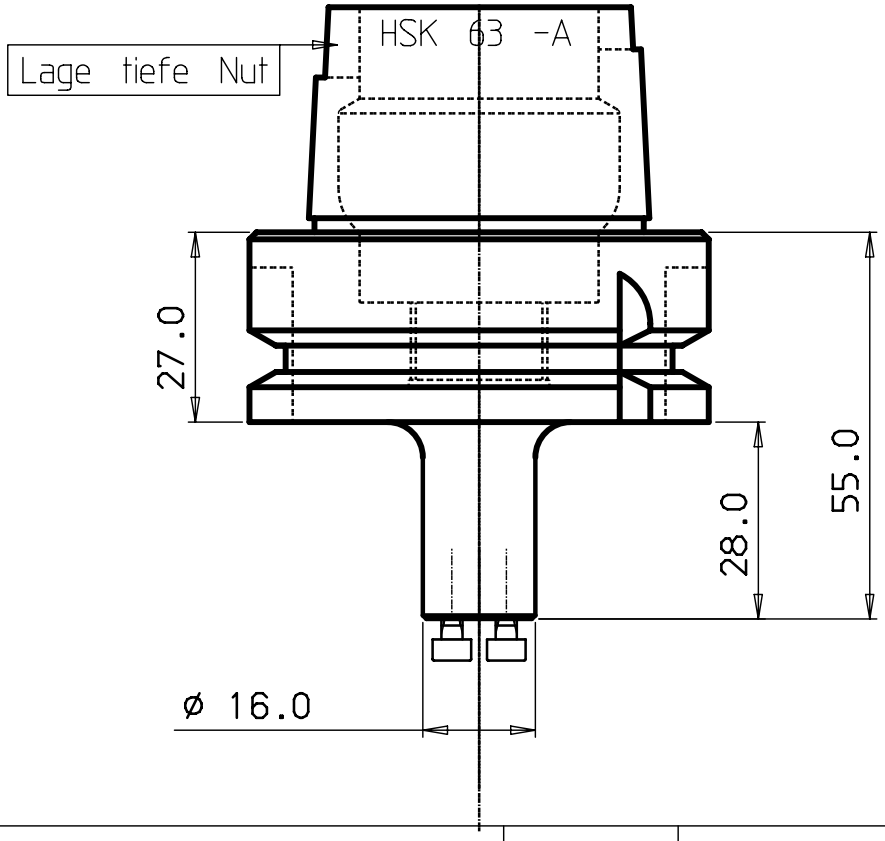

ITEM	Q'NTY	DESCRIPTION	MATERIAL AND REMARKS	RELATED DRAWING	ITEM	SIZE
1		Schaft				

CATEGORY	DESIGNED	DRAWN	CHECKED	DATE	SCALE	SUPERSEDES

TITLE

Adapter

HAVRANEK
74572 Blaufelden
Tel. 07953/91880
Fax. 07953/918811
Internet www.havranek.de
EMail Barbara@havranek@aol.com

REFERENCE

MODIFICATION | A B C D E F G H J K L M N P R S T U V X Y Z

DESIGN OFFICE | DRAWING NUMBER

HSK63A-570-2C-16055