DESIGN OFFICE | DRAWING NUMBER

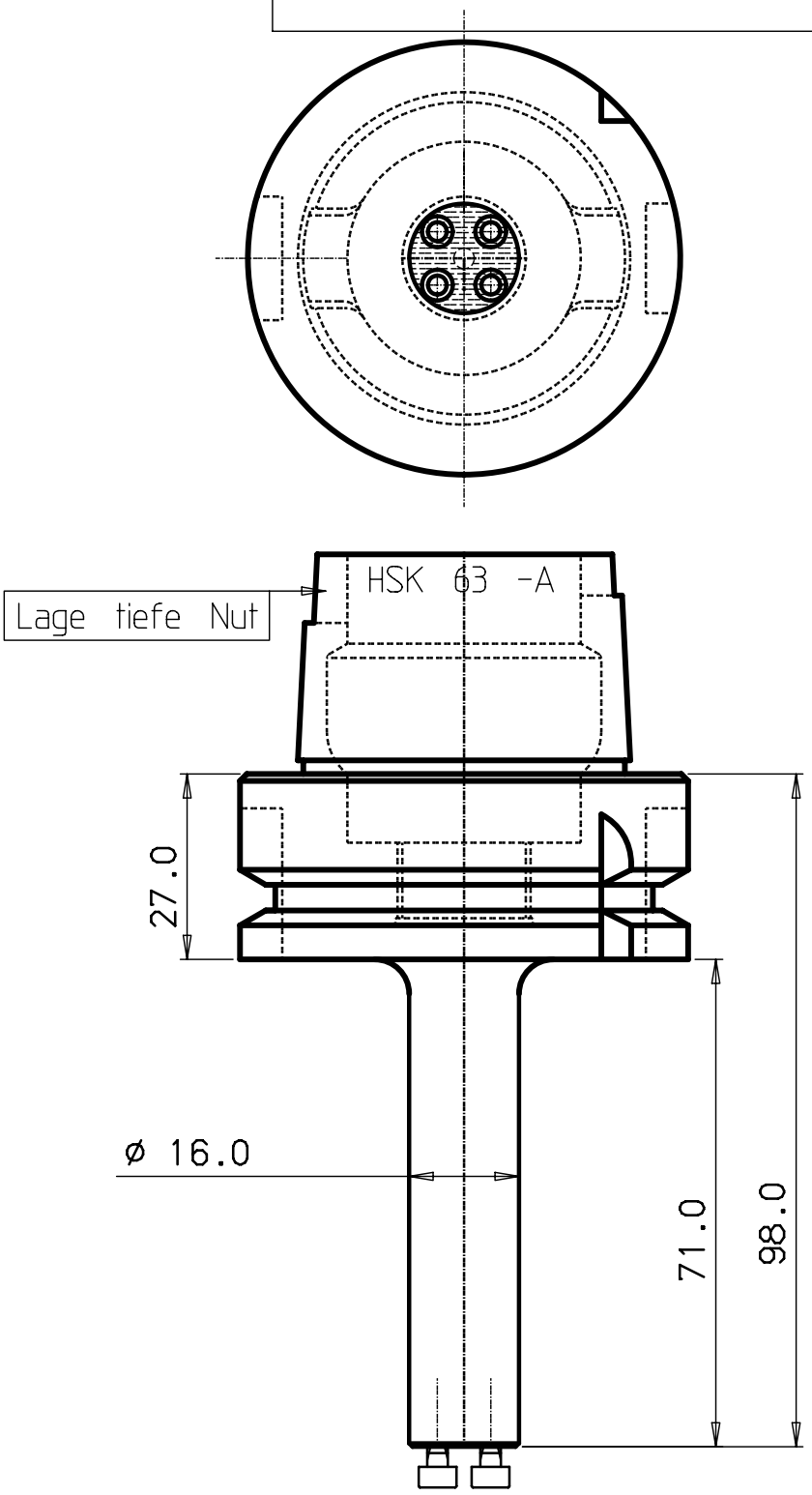

1		Schaft	
ITEM	Q'NTY	DESCRIPTION	MATERIAL AND REMARKS | RELATED DRAWING | ITEM | SIZE

CATEGORY	DESIGNED	DRAWN	CHECKED	DATE	SCALE	SUPERSEDES

TITLE

Adapter

HAVRANEK
74572 Blaufelden
Tel. 07953/7860
Fax. 07953/718811
Internet www.havranek.de
E-Mail Barbara@havranek@aol.com

REFERENCE

MODIFICATION | A B C D E F G H J K L M N P R S T U V X Y Z

DESIGN OFFICE | DRAWING NUMBER

HSK63A-3C-16098