DESIGN OFFICE	DRAWING NUMBER

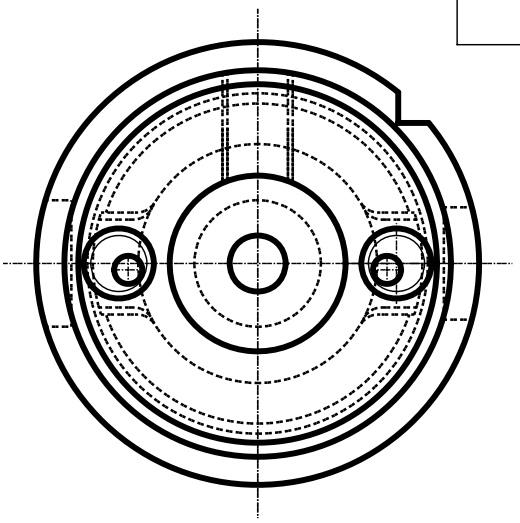

HSK 63 -A

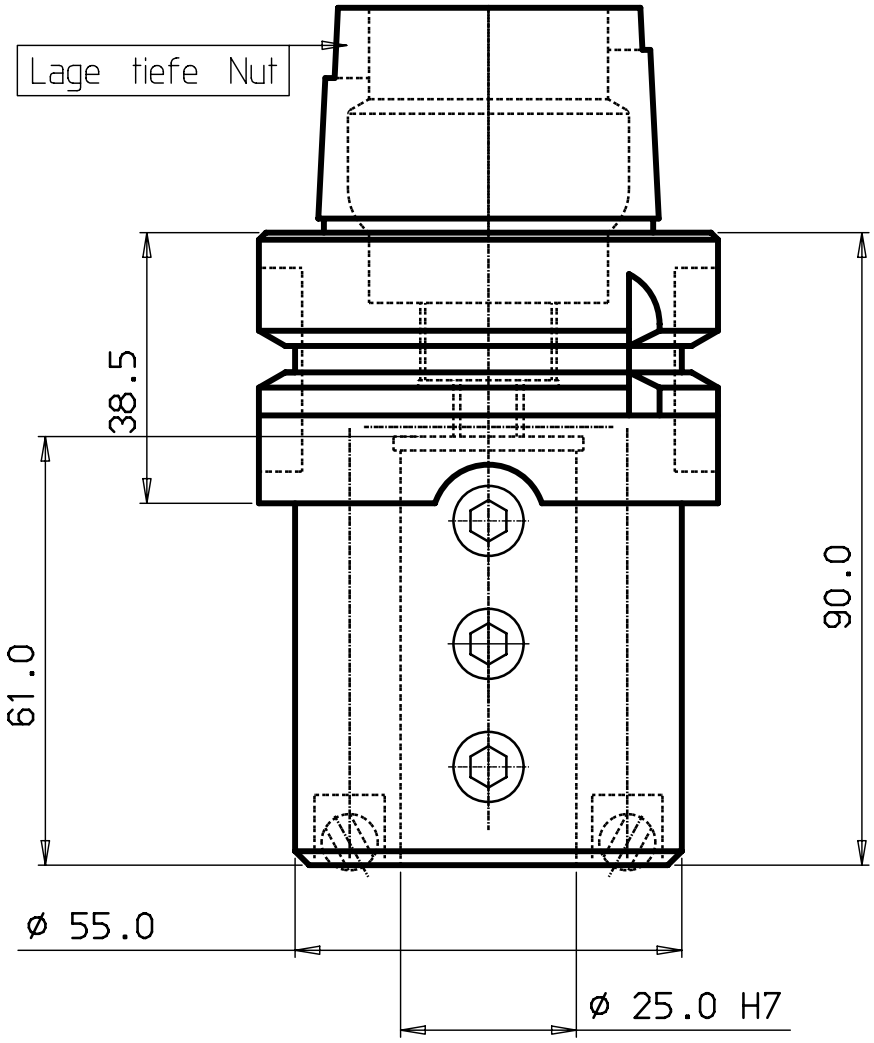

ITEM	Q'NTY	DESCRIPTION	MATERIAL AND REMARKS	RELATED DRAWING	ITEM	SIZE

CATEGORY	DESIGNED	DRAWN	CHECKED	DATE	SCALE	SUPERSEDES

TITLE

Werkzeugaufnahme

HAVRANEK
74572 Blaufelden
Tel. 07953/91660
Fax. 07953/916611
Internet www.havranek.de
E-Mail Barbara@havranek@aol.com

REFERENCE

MODIFICATION A B C D E F G H J K L M N P R S T U V X Y Z

DESIGN OFFICE	DRAWING NUMBER
	HSK63A-25090-55-E2